§343. Cross Connections
[formerly paragraph 12:016-1]

A. There shall be no physical connection between a public water supply and any other water supply which is not of equal sanitary quality and under an equal degree of official supervision; and there shall be no connection or arrangement by which unsafe water may enter a public water supply system. The approval of the State Health Officer shall be obtained prior to making interconnections between potable water supplies.

B. ~~[formerly paragraph 12:016-2] Water from any potable water supply complying with these requirements may be supplied to any other system containing water of questionable quality only by means of an independent line discharging not less than a distance equal to two times the pipe diameter or 2 inches, whichever is greater, above the overflow level of storage units open to atmospheric pressure or by other methods approved by the state health officer.~~ Once delivered to a customer, that is, once water passes through a service connection, it is the customer's responsibility to ensure no water is returned to the public water supply.

C. [formerly paragraph 12:016-2] Water from any potable water supply complying with these requirements may be supplied to any other system containing water of questionable quality only by means of an independent line discharging not less than a distance equal to two times the pipe diameter or 2 inches, whichever is greater, above the overflow level of storage units open to atmospheric pressure or by other methods approved by the state health officer.

§344. Protection of Water Supply/Containment Practices

A. Each water supplier shall protect the water produced and distributed by its water supply system from potential contamination by taking reasonable measures to ensure agricultural, commercial, industrial, governmental, and/or multi-family housing served by a master meter and/or high risk residential customers comply ~~compliance~~ with the containment practices and maintenance/field testing requirements prescribed in LAC 51:XIV.609.F or as otherwise directed by the state health officer. High risk residential customers shall include, but not be limited to, those operating fire suppression systems or irrigation systems equipped with pumps, injectors, pressurized tanks or vessels, or other facilities for injecting into the irrigation system agricultural chemicals such as fungicides, pesticides, soil conditioning or other similar noxious, toxic or

Commented [DHH1]: "state health officer"

Commented [DHH2]: How can the customer achieve this when backflow prevention isn't required for all customers?
DHH recommends this be deleted from the section.
Part XII is to regulate the water systems.
OR
Is this only in accordance with the provisions of this Section(s)?

Commented [DHH3]:
Needs to be more specific to due diligence:
Due diligence means taking every reasonable precaution to the extent of your ability and authority to do so.
The degree of diligence required to meet your duty can vary significantly from situation to situation. The 'care' you provide must be based on 'risk.' The greater the risk of harm, the more care, or precautions that must be taken.

DHH recommends replacing "taking reasonable measures" with "exercising due diligence"

objectionable substances. In implementing any ordinances, rules, contracts, polices, or other steps to achieve such compliance, water suppliers shall have the authority to prohibit or discontinue water service to customers who fail to install, maintain, field test, or report to the water supplier the results of the field test for containment assemblies or methods required in accordance with LAC 51:XIV.609.F.9.

B. Agricultural, commercial, industrial, and governmental customers are required to install and maintain, at a minimum, reduced pressure principal backflow prevention devices as a condition of receiving water service. Commercial, industrial, and governmental customers may receive water service after installing and maintaining a lesser protective backflow prevention device or devices, or no device at all, if, and only if, a certificated Backflow Prevention Surveyor working for the public water system or, if allowed by the public water system a third party Backflow Prevention Surveyor working for the customer certifies, in writing, to the water supplier that there is no contamination threat to the public water supply or that the threat is such that lesser protection is fully protective of the public water supply. Such certifications shall be valid until the plumbing installations downstream of the service connection are altered; control or use of the customer's facility changes; or for a period of three years from the date of certification.

C. The state health officer has determined that Protection of Water Supply/Containment Practices are necessary to protect public health and, therefore, are not subject to the "Grandfather" provisions of §107 of this part. Customers required to install, maintain, and test backflow prevention devices shall do so remedially if they have not already done so. Note: According to the State Fire Marshall, the addition of a backflow prevention device to a fire protection system changes the system's capacity and must be accounted-for.

D. Residential customers with lawn irrigation/sprinkler systems for which pressure vacuum breakers provide adequate protection of the public water supply are exempt from annual testing requirements provided, however, the pressure vacuum breaker must be properly installed and tested upon installation; and tested after any repairs are made. Installation and testing must be performed by an individual qualified to install and inspect pressure vacuum breakers or lawn irrigation backflow prevention devices in accordance with LAC 51:XIV.609.F.8. Results of required tests must be provided timely to the water supplier. A failure by the customer to report to the public water supplier the installation, timely testing or

Commented [DHH4]: Section B. is confusing and needs to be re-worded to state clearly what you want the water systems to be able to do.

Commented [DHH5]: As of January 2016, there will not be "certificated Backflow Prevention Surveyors".

Commented [DHH6]: Water suppliers need to have the authority to override the findings of the Surveyor.

Commented [DHH7]: This needs to be re-stated. "Adequate protection" is too vague.

Commented [DHH8]: This is currently required; there should not be exemptions from annual testing.

maintenance of a pressure vacuum breaker in accordance with the foregoing shall be grounds for interruption of water service.

G. Recordkeeping. Public water suppliers shall maintain records of backflow prevention device testing for a period of three years and shall make such records available to the state health officer or his designee for inspection during normal business hours.

§345. Connection with Unsafe Water Sources Forbidden

[formerly paragraph 12:017]

A. There shall be no cross-connection, auxiliary intake, bypass, inter-connection or other arrangement, including overhead leakage, whereby water from a source that does not comply with these regulations may be discharged or drawn into any potable water supply which does comply with these requirements. The use of valves, including check or back pressure valves, is not considered protection against return flow, or back-siphonage, or for the prevention of flow of water from an unapproved source into an approved system.

B. Public water supply connections to any customer whose connected plumbing includes auxiliary water supplies, such as wells, submerged inlets, ponds, reservoirs, swimming pools and other sources of stagnant, polluted, or contaminated waters shall be made only through an "air gap" consisting of a physical separation between the free flowing discharge end of a potable water supply pipeline and an open, non-pressure, receiving vessel. Such an air gap shall be at least double the diameter of the supply pipe measured above the overflow rim of the vessel and in no case less than 1".

C. Water loading stations

a. For purposes of this part, there are two classes of water loading stations: potable, and non-potable.

b. All loading stations shall be isolated from the public supply using, at a minimum, a double check backflow prevention assembly at the customer connection. Unless specific written permission is granted by the Office of Public Health to fill potable water vessels at a potable water loading station other than over the rim, all vessels being filled at a water loading station shall be filled over the rim.

c. Potable water loading stations shall be assembled using materials suitable for the delivery of potable water, which materials have been sanitized and which materials are, at all times, maintained in

Commented [DHH9]: E. Installation/Repair. Backflow preventers shall be installed and/or repaired by a State Plumbing Board of Louisiana (SPBLA)-licensed plumber who holds a SPBLA water supply protection specialist endorsement on his/her plumbing license pursuant to LSA - R.S. 37:1361 et seq. and its implementing regulations (LAC 46:LV.101 et seq.)*;* or, for those backflow preventers located on public property or otherwise under the complete control of the water supplier (e.g., water meter and the piping upstream of the water meter, if provided), by a Backflow Prevention Assembly Repairer who meets the ASSE 5130 Professional Qualification Standard or other individuals holding a backflow prevention assembly repairer certificate from a nationally recognized backflow certification organization approved by the state health officer. Backflow preventers associated with a landscape irrigation system may be installed, tested, and repaired by a Horticulture Commission of Louisiana-licensed landscape irrigation contractor who holds a SPBLA-issued special water supply protection specialist endorsement in accord with R.S. 3:3808.P.

Commented [DHH10]: F. Backflow prevention assemblies and methods shall be checked and field tested by a Backflow Prevention Assembly Tester who meets ASSE 5110 Professional Qualification Standard, or other individuals holding a testing certificate from a nationally recognized backflow certification organization approved by the state health officer. Testing procedures shall be in accord with the requirements of this code.
1. The following types of backflow prevention assemblies and methods shall be checked and field tested in accordance with the frequency established in this code:
. a. double check valve assemblies;
. b.. reduced pressure principle backflow prevention assemblies;
. c.. pressure vacuum breakers;
. d. spill resistant vacuum breakers;
. e. air gaps (water distribution) on high hazard applications; and,
. f. other backflow prevention devices as specified by the plumbing official or water supplier.
2.. . Any backflow preventer in this code which is found defective shall be repaired by an individual meeting the qualifications specified in this code.
3. Frequency. The backflow prevention assemblies and methods specified in this code shall be field tested:
. a. upon installation;
. b. when cleaned, repaired, or overhauled;
. c. when relocated; and
. d. annually.

Commented [DHH11]: Change to "sources"

Commented [DHH12]: Delete "swimming pools"

Commented [DHH13]: Reword.
Variances have been given for potable water supplies as source for nonpotable systems.

Commented [DHH14]: "Water loading stations" should have its own section.
(§346)

a sanitary fashion. Prior to delivering water through a potable water loading station, bacteriological samples taken at the discharge end of the loading station shall be analyzed in accordance with the total coliform rule to ensure the water is fit for human consumption. Any water delivered prior to certification the water is fit for human consumption shall be subject to a mandatory boil water advisory. All vessels used to deliver potable water shall be certified for delivery of potable water and shall be maintained in a sanitary manner. Furthermore, water in bulk vessels shall be tested for disinfectant residual immediately prior to delivering water and hourly while deliveries continue. At a minimum, the disinfectant residual at time of delivery shall be 0.5 mg/l or the water delivered shall be delivered under a boil water advisory. Bacteriological testing of water delivered using potable water vessels shall be at the discretion of the state health officer.

Pressure Vacuum Breaker Assembly – Chapter 7

To understand the operation of a vacuum breaker, it is important to review the hydraulics of a siphon. When water is siphoned from a tank, a hose is filled with water, and both ends are placed below the water level. One end of the hose is submerged in the tank, the other on the outside below the tank's water level. Once both ends of the hose are open and water begins to flow out of the hose, the velocity increase creates a pressure reduction below atmospheric pressure within the hose. Atmospheric pressure on the surface of the tank pushes water into the hose. Remember, water always flows from high pressure to low pressure. Water will continue to flow from the tank until it empties or the outside hose end is at the same level as the surface of the water in the tank.

If a nail was used to puncture a hole near the top of the hose loop, what would happen? The water flow would stop, and the water would drain from the hose. By introducing air into the hose, the pressure was equalized and the flow stopped.

A vacuum breaker lets air into the piping system, in many respects like the nail in the hose. This mechanical device is a siphon breaker. When the potable water piping-system pressure is reduced, a mechanical valve opens to the atmosphere allowing air into the system, equalizing pressure and stopping the return flow from the downstream siphon or backsiphonage.

The pressure type vacuum breaker assembly (PVB) as shown in **Figure 7-1**, evolved from the atmospheric vacuum breaker (AVB). The AVB has one moving part that works as an air inlet or port, and it serves as a check valve to the supply piping when no potable water pressure is present.

There were a number of AVB installation restrictions due to the limits of the design. As referenced in the previous chapter, one of the AVB's limitations was the restriction of no continuous water pressure. The concern of the inlet valve sticking closed is serious, as it would render the AVB useless. What if the inlet valve was mechanically or force-loaded to an open position with a spring, for example? With the spring pushing the inlet open, the continuous pressure restriction would no longer apply and would allow the installation of valves downstream and water pressure to the vacuum breaker 24 hours per day. The PVB air-inlet valve is force-loaded to an open position with a minimum of 1.0 psi (6.9 kPa) loading. This means the valve will open before the internal water pressure in the valve body drops below 1.0 psi (6.9 kPa).

The AVB "float" check valve relies on gravity to close. If debris was lodged in the supply piping or the checking part is worn, there is no positive closure to the potable supply.

What if this check was force-loaded with a spring, for example, to a closed position? This would improve the valve's safety and closure concerns. The PVB check valve is designed so it must close with a minimum of 1.0 psi (6.9 kPa) differential from the inlet to the outlet of the check valve.

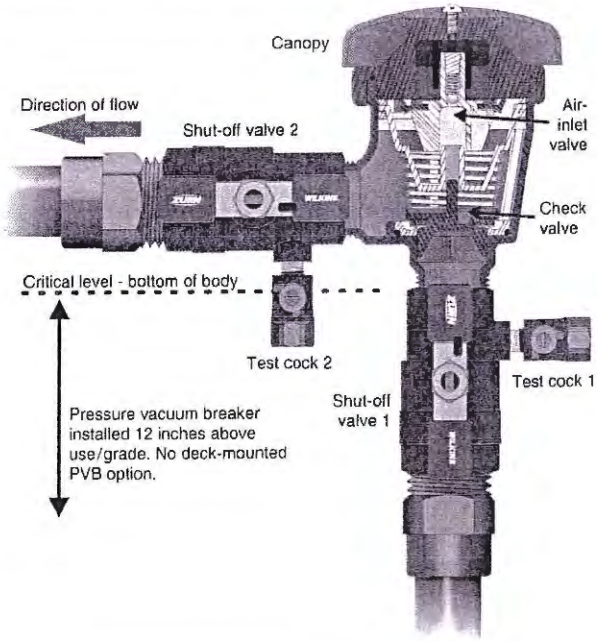

Pressure Vacuum Breaker Assembly

Figure 7-1

In addition, because the air-inlet and check valves are mechanically loaded to open and close respectively, they are independently acting or, in other words, they should not rely on each other's components to function correctly.

The PVB is a testable vacuum breaker assembly. To field-test the assembly, it includes two isolation valves that must be tightly closing, such as a ball valve or resilient seated gate valve. Assemblies 2 inches (5.1 cm) and smaller have two tightly closing or resilient seated test cocks located on the inlet and outlet of the check valve.

In order to be considered an approved assembly, it must have all the components as it was shipped from the factory.

An approved assembly must be in-line testable and repairable. In other words, it will be tested and repaired without removing the body from the pipeline. The following information is required by the ASSE product performance standard to be visible after the assembly has been installed:

- Name of the manufacturer or trademark;
- Type and model number of the assembly;
- Maximum rated working pressure;
- Maximum water temperature;
- Serial number;
- Nominal valve size; and
- Direction of flow through the assembly.

The ASSE 1020 standard for PVBs provides for assemblies sized ½ through 2 inches (1.3-5.1 cm). A few of the design and application requirements from the standard are as follows:

- The maximum allowable pressure loss through the assembly is 10 psi (69 kPa). This is a domestic flow rate of approximately 7.5 feet per second (2.3 m/s).
- The cold water assembly is designed for use up to 110°F (43°C), and a hot-water assembly range is from 33°F (0.6°C) to not more than 180°F (82°C). A manufacturer may rate the assembly at a higher temperature, and it would be evaluated at that temperature.
- The assembly should be installed where water discharge will not cause damage. The *2009 Uniform Plumbing Code* states:

  603.3.9 Drain lines serving backflow devices or assemblies shall be sized in accordance with the discharge rates of the manufacturer's flow charts of such devices or assemblies.

- Test cocks sizes for a PVB will either be ⅛ or ¼ NPS.

Now that you know some minimum specifications of the PVB, here is a hypothetical question. If the minimum check closure differential pressure is 1 psi (6.9 kPa), what is the maximum? There is no maximum value stated in the performance standards maintained by the ASSE (1020) or the specification written by the Foundation for Cross-Connection Control and Hydraulic Research (Chapter 10).

When a check valve is field-tested, the value obtained is the closing differential pressure. A new assembly will typically have a check valve reading between 1.5 and 3.0 (10-21

kPa). The science of spring production is not exact. When a manufacturer orders springs from a vendor, the tolerance may be 10 percent to 15 percent. Therefore, a PVB manufacturer will not order a supply of 1 psi (6.9 kPa) springs, as the quantity may range in value from 0.9 to 1.1 psi (6-7.6 kPa). The manufacturer may order a supply of 1.6 psi (11 kPa) springs to obtain a range of 1.4 to 1.8 psi (9.6-12.4 kPa) springs.

If a PVB's check has a value of 1.6 on installation, 1.4 (9.6 kPa) after the first year, and 1.1 (7.6 kPa) after year two, is it the spring losing tension? Probably not. It is unusual for a spring to lose its tension unless it is installed in an undersized line or has been exposed to other factors, such as freezing. The likely loss of differential closing pressure is check valve disc decay. When a disc is new, it will have a hard surface, allowing a higher differential pressure. With exposure to water, including its various treatment chemicals, the disc will soften, and the result is a lower closing differential pressure. For example, if a number 1 check valve was 0.8 psid (5.5 kPa), a disc replacement with a new hard surface may raise the reading to 1.8 psid (12.4 kPa).

The opposite may be true for the air-inlet. The valve is pushed off the seat versus on to the seat as in a check valve. A softer disc will result in a higher differential or opening point.

7.1 PVB (2-½ Inch and Larger)

From the 1950s through the late 1970s, a few manufacturers offered pressure vacuum breakers larger than 2-inch (5.1 cm) sizes. These assemblies at first glance appeared to be a double check valve assembly with the addition of an air-inlet valve downstream of the second check valve. Mechanically, the assembly contained two shut-off valves, four test cocks, two check valves, and the air-inlet.

The size of the air-inlet is in proportion to the line size or diameter of the assembly. Larger diameter assemblies would have yielded very large air-inlet valves. To compensate for this and other sizing issues, it was agreed to include a second check valve and reduce the air-inlet proportion.

Parts for these assemblies are no longer provided, and they are not listed as approved assemblies. Some jurisdictions may allow their continued service until there is a mechanical failure, at which time they will be replaced.

Although there are no published test procedures for the large diameter PVB, it is suggested that the air-inlet opening be determined first, and then test the two checks as a double check valve assembly.

This large diameter assembly is a pressure type vacuum breaker, and it must comply with all the PVB installation requirements, such as having the critical level 12 inches (30.5 cm) above the downstream use.

7.2 PVB Code Requirements – Summary

The PVB may be used at high- or low-health hazard applications. The device provides backsiphonage protection only. The *2009 Uniform Plumbing Code* states:

> 603.3.3 The premise owner or responsible person shall have the backflow prevention assembly tested by a certified backflow assembly tester at the time of installation, repair, or relocation and not less than on an annual schedule thereafter, or

more often when required by the Authority Having Jurisdiction. The periodic testing shall be performed in accordance with the procedures referenced in Table 14-1 by a tester qualified in accordance with those standards.

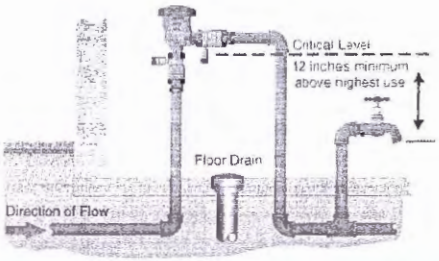

Pressure Vacuum Breaker Assembly Indoor Installation

Figure 7-2

603.3.4 Access and clearance shall be provided for the required testing and maintenance and repair. Access and clearance shall require a minimum of 12 inches (305 mm) between the lowest portion of the assembly and grade, floor, or platform. Installations on valves exceeding five feet (1.524 m) above the floor or grade shall be provided with a permanent platform capable of supporting a tester or maintenance personnel. See **Figure 7-2**.

Many jurisdictions may require additional installation provisions, such as side clearances to access test cocks or perform field maintenance. It is important to become familiar with local and state codes.

Model plumbing codes prohibit the use of a stop-and-waste valve below ground upstream of a backflow preventer, as this outlet can become submerged and is a cross-connection. These devices should not be installed upstream of a PVB. A stop-and-waste valve upstream and a zone valve downstream on an irrigation system are not replacements for this assembly's shut-off valves.

7.3 PVB Installation

- Because the PVB provides backsiphonage protection only, it is primarily used for isolation protection. These assemblies will be located on the water supply to individual plumbing fixtures and appliances.

  They will not be installed at a service line to a building, for example. Some jurisdictions consider PVBs containment assemblies on irrigation systems, if the irrigation supply connection is made prior to the potable water system or on a metered irrigation system, for example.

- All vacuum breakers are considered high-hazard or health hazard protection. The assembly will protect the potable system from toxic materials. Remember that any backflow preventer that provides high-hazard protection will be acceptable for low-hazard applications.

- The PVB must be installed with its critical level a minimum of 12 inches (30.5 cm) above the highest downstream usage. This is an operational limit of the device established in the product performance standard, ASSE 1020.

- The PVB may be subjected to continuous pressure.

- A PVB must not be subjected to backpressure. The air-inlet valve that allows air into the system to stop a siphon cannot determine the water's direction of flow, as long as pressure holds the valve closed to the atmosphere. If the check valve was damaged, contaminants or pollutants with backpressure could enter the supply piping. Therefore, elevated piping, auxiliary sources of water, and pressure pumps, for example, are not permitted downstream of a PVB.

- PVBs must not be installed in areas containing toxic fumes. When the air-inlet valve opens to atmosphere, toxic fumes may be drawn into the piping system. Locating a PVB in a chemistry lab exhaust hood, for example, is not permitted.

- A PVB must have an adequate supply of atmosphere to stop a siphon. If a PVB were installed within a box in a wall or wrapped with insulation outside, air might not be able to enter the device and stop a siphon.
- PVBs must not be located in vaults or pits. If the pit fills with runoff water and the air-inlet becomes submerged, the installation is a cross-connection because contaminated water can enter the system.
- PVBs must be installed upright and plumb.
- PVBs must be accessible. These devices must not be installed within a wall, for example.
- If a PVB is installed outdoors, it must be protected from freezing conditions. The *2009 Uniform Plumbing Code* states:

  > 603.3.8 In cold climate areas, backflow assemblies and devices shall be protected from freezing with an outdoor enclosure or by a method acceptable to the Authority Having Jurisdiction.

  Enclosures shall comply with *ASSE 1060, Outdoor Enclosures for Backflow Assemblies.*
- Consideration should be given to protection from tampering, vandalism or theft.

7.4 PVB Operation See **Figures 7-3-A through F.**

Typically, potable supply water will flow up through the assembly body and out through a discharge located on the side. Once water has passed the inlet shut-off valve, known as shut-off valve number 1, it opens and flows through a check valve. This check valve is loaded with a 1 psi (6.9 kPa) closing differential. As the assembly body is pressurized, the air-inlet is pushed closed to atmosphere with water pressure. The water pressure must overcome the 1 psi (6.9 kPa) differential loading of the air inlet to force it

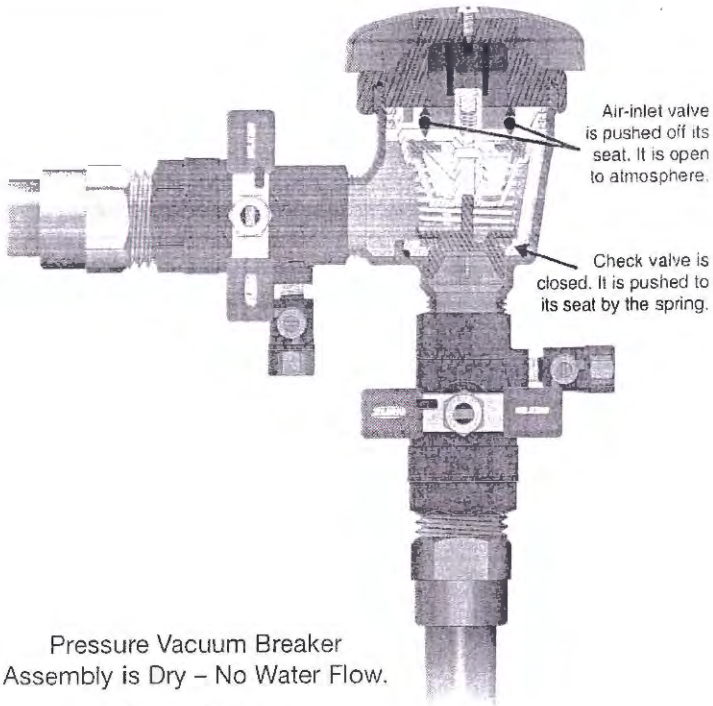

Pressure Vacuum Breaker Assembly is Dry – No Water Flow.

Figure 7-3-A

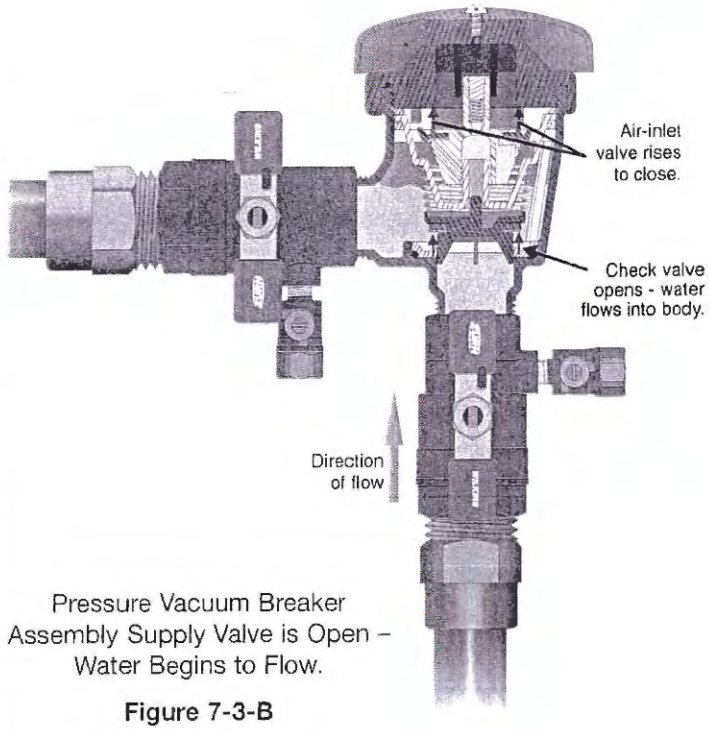

Pressure Vacuum Breaker Assembly Supply Valve is Open – Water Begins to Flow.

Figure 7-3-B

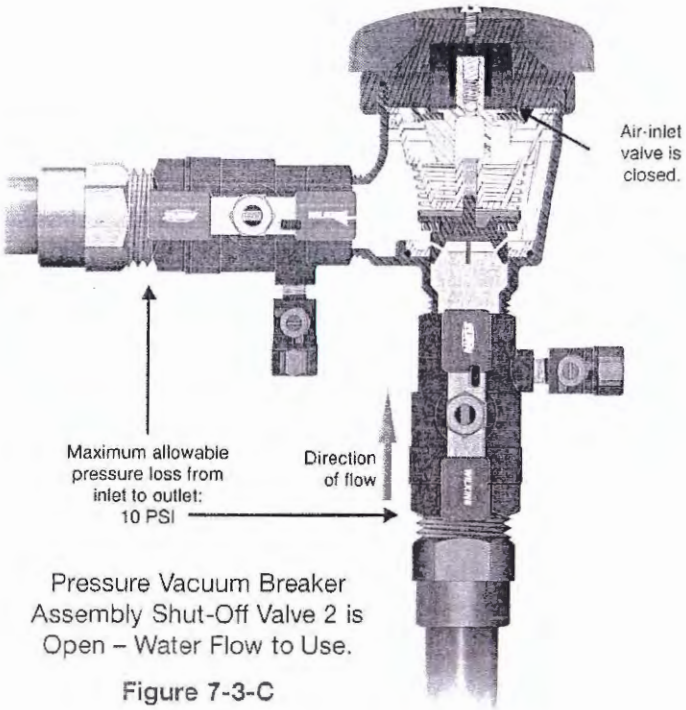

Pressure Vacuum Breaker Assembly Shut-Off Valve 2 is Open – Water Flow to Use.

Figure 7-3-C

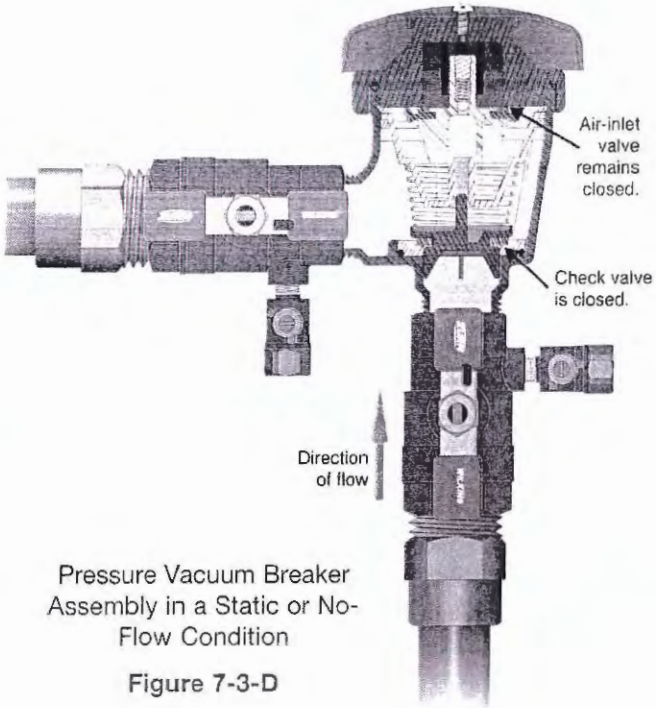

Pressure Vacuum Breaker Assembly in a Static or No-Flow Condition

Figure 7-3-D

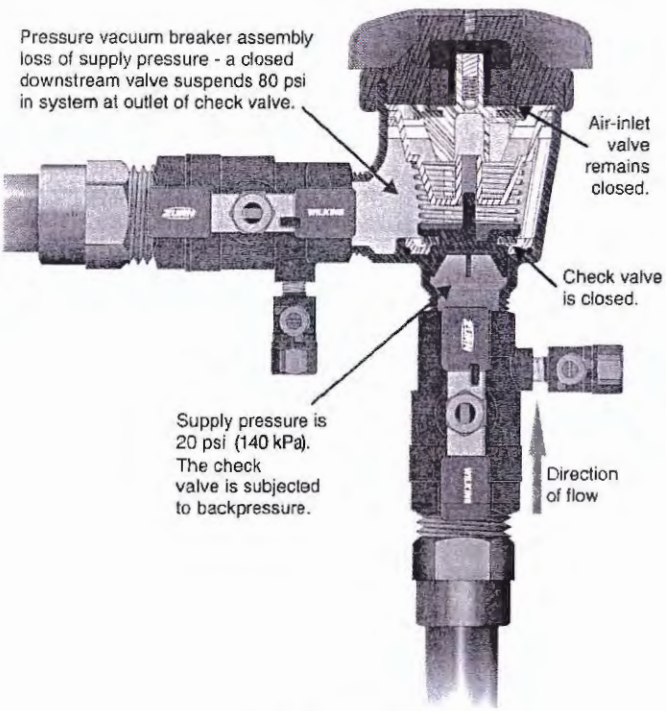

Figure 7-3-E

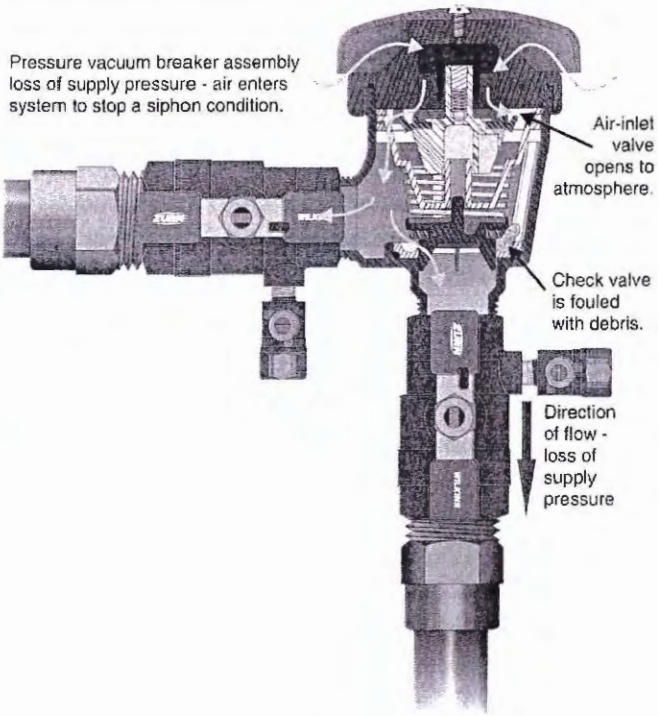

Figure 7-3-F

closed. Water then flows through the outlet shut-off valve known as shut-off valve number 2.

With no water flow through the assembly and the pressure maintained in the downstream piping, the check valve will close and the air-inlet valve will remain closed.

If there is a loss of supply pressure and the check valve holds tight, the air-inlet valve will not open and the water pressure will be maintained in the system until there is a downstream demand.

If there is a loss of supply pressure with a fouled check valve, the air-inlet valve must open before the water pressure inside the valve body reaches 1.0 psi (6.9 kPa). Once the air-inlet valve opens to atmosphere, any siphon from the downstream piping will stop.

Could the check valve of a PVB ever be subject to backpressure? Yes. Consider an irrigation system with zone control valves downstream of a PVB. If the check valve is closing tightly, pressure will be trapped between the check and the zone valves. If there is a loss of supply pressure due to a high demand, for example, the supply pressure may drop below the pressure downstream of the check, thereby establishing backpressure on the check.

7.5 PVB Tester Responsibility

When field testing a pressure vacuum breaker assembly, it is important to remember the following points which are also provided in Chapter 12 – Backflow Preventer Testing and Appendix A:

a. Verify that it will be acceptable to have the water shut off downstream of the assembly during the test.

b. Verify that the assembly is not subjected to backpressure. Potential plumbing code violations should be noted in the comments section of the report form.

c. Test reports are kept by the Authority Having Jurisdiction, owner and tester. The report forms must be complete.

d. Test values are recorded for the check valve and air-inlet valve. Passing requires a minimum of 1.0 psi (6.9 kPa) for each component.

e. If a component failed, provide a description of the failure, such as cut disc, broken valve guide, etc. Remember, comments such as "replaced check valve" have little value toward preventing future failures.

f. Shut-off valve tightness is recorded on the report form.

g. Restore the assembly to its pre-test condition—as it was when the tester arrived on site.

never be blocked or sealed. Often, individuals who are unaware of how the device functions will wrap the air inlet with cloth or tape to prevent water from spraying out. Water may spray out of the air inlet when the device is subjected to backpressure, e.g., when a hand-operated sprayer is attached to a hose after the device. This occurs because the amount of backpressure in the hose fluctuates as the shut-off valve within the sprayer is opened and closed. When the backpressure drops, the valve opens to the atmosphere. When the backpressure increases, the valve slams closed, forcing out a small amount of water.

Hose Bibb Vacuum Breaker

A **hose bibb vacuum breaker** (HBVB) is an atmospheric vacuum breaker that has been adapted to fit on a hose bibb or sill cock (Figure 5-7). It is commonly installed on hose bibbs where a cross-connection could easily be created by attaching a hose to a faucet. Again, as with the AVB, in order for the hose bibb vacuum breaker to work properly shut-off valves should be avoided downstream from the device. No method to adequately test hose bibb vacuum breakers exists.

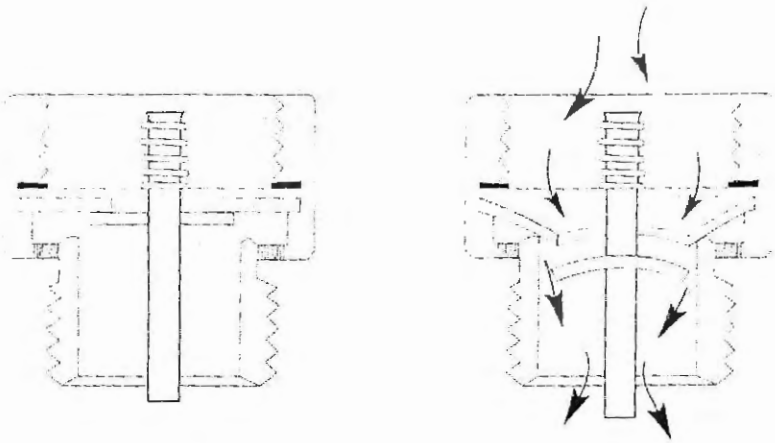

Figure 5-7 Hose Bibb Vacuum Breaker
The hose bibb vacuum breaker can be used to prevent backsiphonage but not backpressure, and it can be used as protection against both high and low hazards.

Pressure Vacuum Breaker

Pressure vacuum breakers (PVBs) are very similar to AVBs in design. However, the PVB is an assembly instead of a device; it has two shut-off valves and two test cocks. Also, the air inlet valve and the check valve operate independently of each other (Figure 5-8).

The spring on the check valve keeps the check valve closed, unless water is flowing through the assembly in the proper direction under suffi-

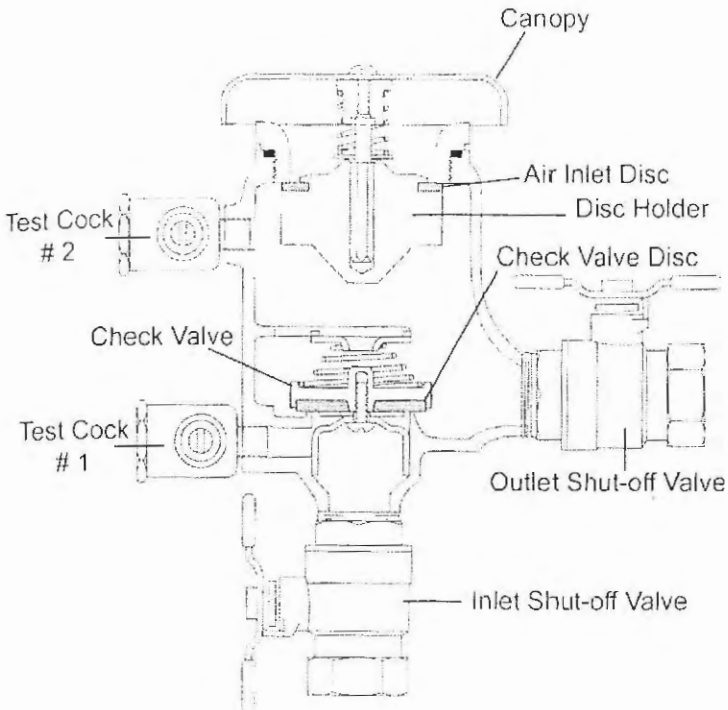

Figure 5-8 **Pressure Vacuum Breaker**
The check valve must be forced open in the normal direction of flow. During backsiphonage, the air inlet opens and allows atmospheric pressure into the assembly.

cient pressure. Since the check valve must be forced open in the direction of flow, it provides even better protection against backflow than the float-type check. The AWWA specification for a spring-loaded, soft-seated check valve is that it must be drip tight and hold 1.0 psi in the direction of flow. Because the air inlet is also loaded, it will open in response to backsiphonage before the water pressure falls to within 1.0 psi of atmospheric pressure. In other words, it will open before the water line pressure falls below 15.7 psi.

While the springs provide slightly more protection, they can not be relied on to prevent backpressure-backflow. Therefore, like the AVB, the PVB is only approved for backsiphonage conditions. This assembly can be used under either low or high hazard situations. Generally, the PVB is used for isolation purposes. For instance, it is commonly used on lawn irrigation systems (Figure 5-9).

The PVB cannot be subjected to backpressure.

Unlike the AVB, the PVB can be used where it will be subjected to continuous pressure. However, while the air inlet loading helps prevent the air inlet valve from becoming sealed closed, the loading does not totally mitigate the problem, and the air inlet valve will often stick in the closed position if the PVB is subjected to long periods of continuous pressure. Because the PVB can be subjected to continuous pressure, it is acceptable to have a shut-off valve downstream of the assembly.

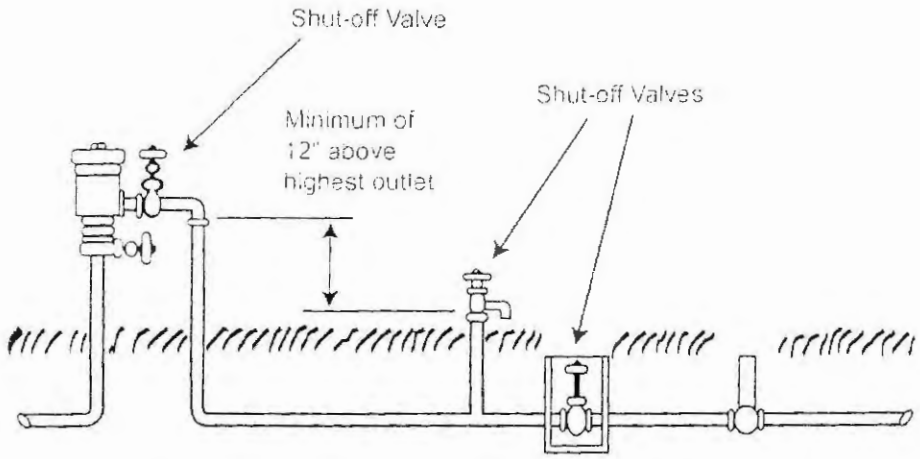

Figure 5-9 Shut-off Valves Are Allowed Downstream on Pressure Vacuum Breakers
Because the pressure vacuum breaker can be subjected to continuous pressure, it is acceptable to have a shut-off valve downstream.

Since the PVB cannot be subjected to backpressure, the installation specifications require that it be installed so that the critical level is 12 inches above the highest point in the system after the vacuum breaker. The **critical level** of a PVB is usually located at the opening of the check valve. As with the AVB, the air inlet port should not be blocked as the assembly depends on the inflow of air to work properly. The assembly must not be subjected to flooding, and it must be installed in the direction of flow. Since this assembly can be tested, it is essential that it be installed in a location where it can be reached.

The PVB must be installed so that the critical level is 12 inches above the highest point in the system.

Backflow Protection for Irrigation Systems

Lawn irrigation systems are classified as a high hazard. Obviously, if chemicals, such as, fertilizers or pesticides are injected into the system, a greater hazard is created. Pop-up sprinkler heads or other ground-level sprinklers also present a high hazard, because irrigation lines can become contaminated with fertilizers, pesticides and other substances (Figure 5-10). Recall the Holy Cross football team case, where the irrigation lines were contaminated with hepatitis after children played near the irrigation heads.

Lawn irrigation systems are classified as a high hazard.

Spill-resistant Vacuum Breaker Assembly

Spill-resistant vacuum breakers (SVBs) are similar to PVBs in design. The PVB has two shut-off valves and two test cocks. The SVB has two shut-off valves, one test cock and one bleed screw (Figures 5-12 to 5-16).